a.c./d.c. voltage monitoring in 1-phase mains

G2UU300V10

Monitoring relays - GAMMA series

Undervoltage monitoring

Supply voltage selectable via power modules

1 change-over contact

Width 22.5mm

Industrial design

Technical data

1. Functions

a.c./d.c. undervoltage monitoring in 1-phase mains with adjustable threshold and hysteresis and adjustable tripping delay:

2. Time ranges

	Adjustment range	
Start-up suppression time:	-	
Tripping delay:	0.2s	10s

3. Indicators

Green LED ON:	indication of supply voltage
Yellow LED ON/OFF:	indication of relay output
Red LED ON/OFF:	indication of failure of the corresponding threshold
Red LED flashes:	indication of tripping delay of the corresponding threshold

4. Mechanical design

Self-extinguishing plastic housing, IP rating IP40
Mounted on DIN-Rail TS 35 according to EN 50022
Mounting position: any. Shockproof terminal connection according to VBG 4 (PZ1 required), IP rating IP20
Tightening torque: max. 1Nm
Terminal capacity:
- 1 x 0.5 to 2.5mm² with/without multicore cable end
- 1 x 4mm² without multicore cable end
- 2 x 0.5 to 1.5mm² with/without multicore cable end
- 2 x 2.5mm² flexible without multicore cable end

5. Input circuit

Supply voltage:	
12 to 400V a.c.	terminals A1-A2 (galvanically separated) selectable via power modules TR2
Tolerance:	according to specification of power module
Rated frequency:	according to specification of power module
Rated consumption:	2VA (1.5W)
Duration of operation:	100%
Reset time:	500ms
Residual ripple for d.c.:	-
Drop-out voltage:	>30% of the supply voltage
Overvoltage category:	III (according to IEC 60664-1)
Rated surge voltage:	4kV

6. Output circuit

1 potential free change-over contact

Rated voltage:	250V a.c.
Switching capacity (distance <5mm):	750VA (3A / 250V a.c.)
Switching capacity (distance >5mm):	1250VA (5A / 250V a.c.)
Fusing:	5A fast acting
Mechanical life:	20 x 10^6 operations
Electrical life:	2 x 10^5 operations at 1000VA resistive load
Switching frequency:	max. 60/min at 100VA resistive load max. 6/min at 1000VA resistive load (according to IEC 947-5-1)
Overvoltage category:	III (according to IEC 60664-1)
Rated surge voltage:	4kV

7. Measuring circuit

Fusing:	max. 20A (according to UL 508)
Measured variable:	d.c. or a.c. Sinus (48 to 63Hz)
Input:	
30V a.c./d.c.	terminals E-F1(+)
60V a.c./d.c.	terminals E-F2(+)
300V a.c./d.c.	terminals E-F3(+)
Overload capacity:	
30V a.c./d.c.	$100V_{eff}$
60V a.c./d.c.	$150V_{eff}$
300V a.c./d.c.	$440V_{eff}$
Input resistance:	
30V a.c./d.c.	47kΩ
60V a.c./d.c.	100kΩ
300V a.c./d.c.	470kΩ
Switching threshold	
Max:	10% to 100% of U_N
Min:	5% to 95% of U_N
Overvoltage category:	III (according to IEC 60664-1)
Rated surge voltage:	4kV

8. Accuracy

Base accuracy:	≤3% (of maximum scale value)
Frequency response:	-10% to +5% (at 48 to 63Hz)
Adjustment accuracy:	≤5% (of maximum scale value)
Repetition accuracy:	≤2%
Voltage influence:	-
Temperature influence:	≤0.05% / °C

9. Ambient conditions

Ambient temperature:	-25 to +55°C (according to IEC 68-1) -25 to +40°C (according to UL 508)
Storage temperature:	-25 to +70°C
Transport temperature:	-25 to +70°C
Relative humidity:	15% to 85% (according to IEC 721-3-3 class 3K3)
Pollution degree:	3 (according to IEC 60664-1)
Vibration resistance:	10 to 55Hz 0.35mm (according to IEC 68-2-6)
Shock resistance:	15g 11ms (according to IEC 68-2-27)

Functions

Undervoltage monitoring (UNDER)
When the measured voltage falls below the value adjusted at the MIN-regulator, the set interval of the tripping delay (DELAY) begins (red LED MIN flashes). After the interval has expired (red LED MIN illuminated), the output relay switches into off-position (yellow LED not illuminated). The output relay again switches into on-position (yellow LED illuminated), when the measured voltage exceeds the value adjusted at the MAX-regulator. The LEDs MIN and MAX are flashing alternating, when the minimum value for the measured voltage was chosen to be greater than the maximum value.

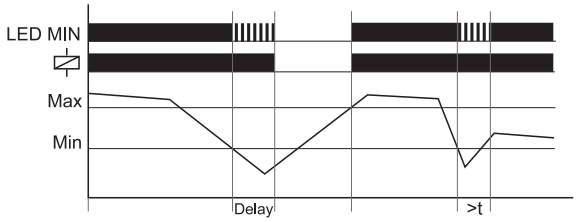

Connections

Range 30V with power modul 24V a.c.

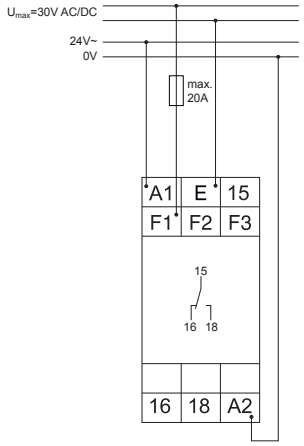

Range 60V with power modul 230V a.c.

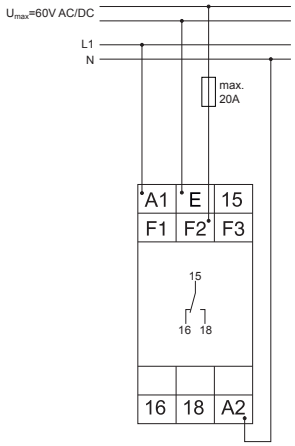

Range 300V with power modul 400V a.c.

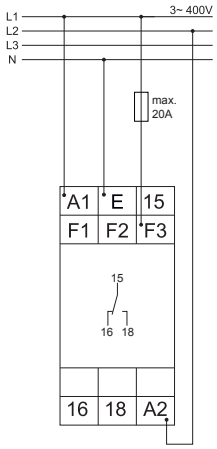
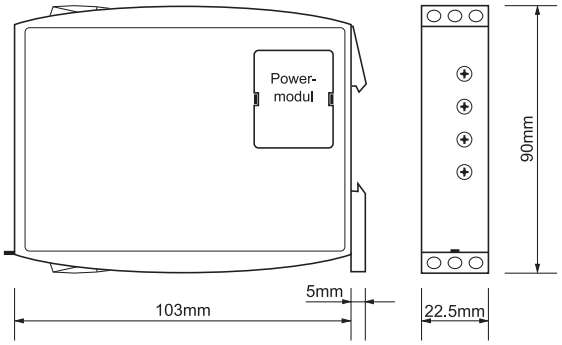
Dimensions